LINE	DESIGNER
MODEL	IGJ–406–16
NUM	

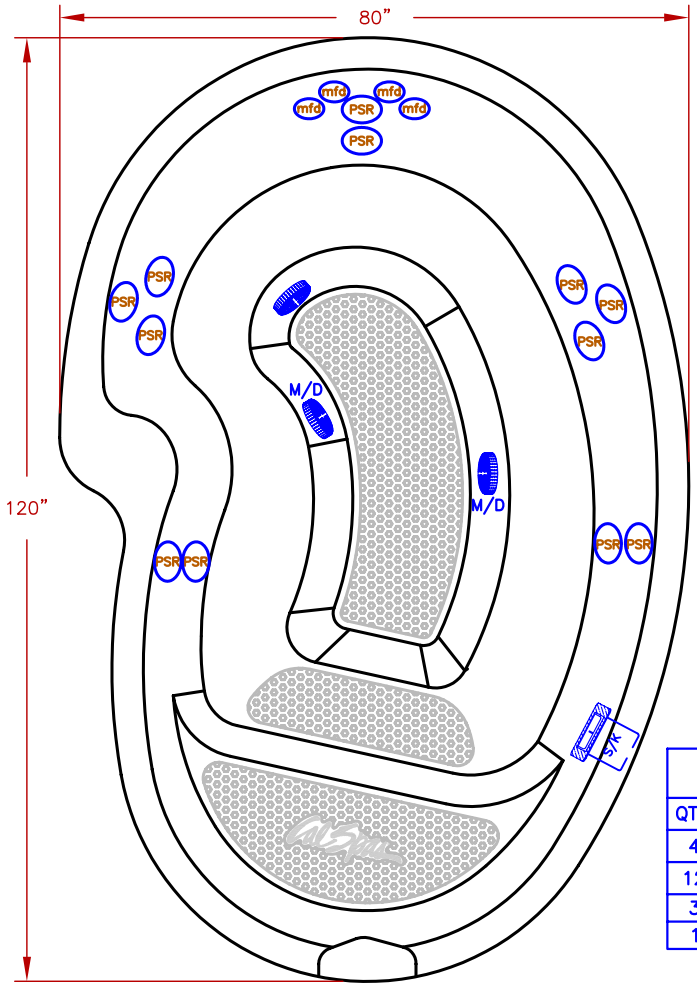

16 JETS LEGEND

QTY.	SYMB.	DESCRIPTION	PART#
4	(mfd)	MICRO FLOW DIRN.–BLK CLUSTER	PLUCS2295061SL
12	(PSR)	POWER STORM RIFFLED–BLK CLUSTER	PLUCS2295141SL
3	(M/D)	MAIN DRAIN	
1	(SK)	SKIMMER	

LINE	DESIGNER
MODEL	IG–406
NUM	

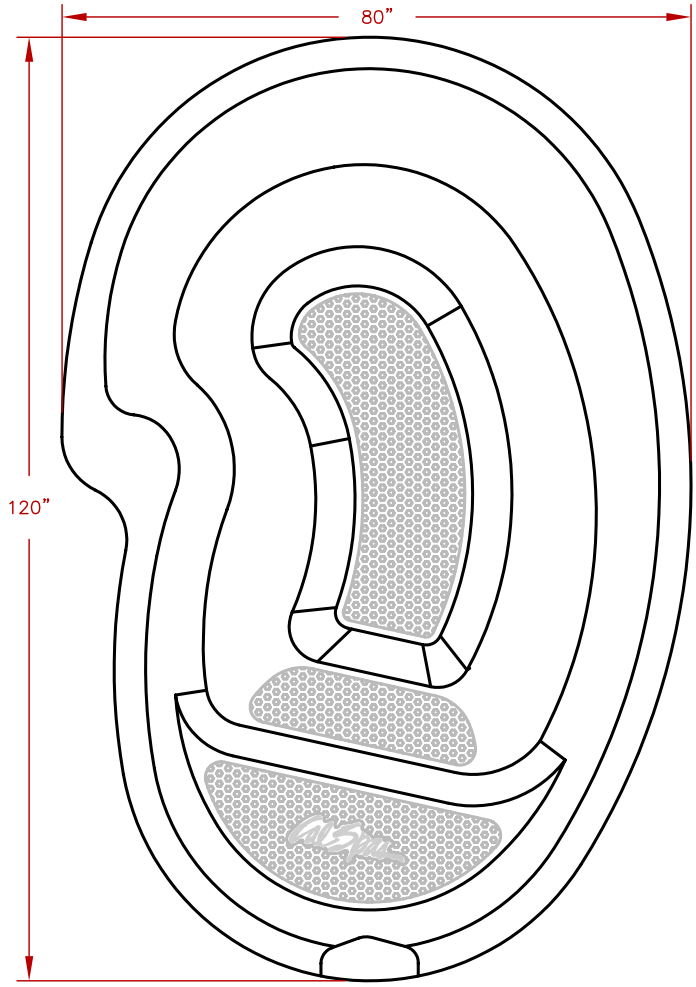

NOTE: DUE TO OUR CONTINUOUS IMPROVEMENT PROGRAM, ALL MODELS AND SPECIFICATIONS ARE SUBJECT TO CHANGE WITHOUT NOTICE.

SPECIFICATIONS
DIMENSIONS (IN) 80" X 120" X 35"
DIMENSIONS (CM)
WATER CAP. 800 GAL
APP. WEIGHT 750 LBS

TITLE
2014 SPA LINE
DESIGNER SERIES
INGROUND–406

DWG BY	DATE
S. LINARES	01/01/14

REV DESCRIPTION	REV No.

SCALE: N/A